MRO Delay Line ICD

Delay Line to Metrology System

ICD INT-406-VEN-0010

The Cambridge Delay Line Team

rev 0.1

10 August 2007

Cavendish Laboratory
JJ Thomson Avenue
Cambridge CB3 0HE
UK

1 ICD Description

ICD Number	Sub-systems		Org	Owner	Brief description and preliminary contents
INT-406-VEN-0010	Delay line	Metrology system	UoC	MF	Defines the opto-mechanical and electronic interfaces between the delay lines and the metrology system. • Geometric requirements for metrology beams – positions, sizes • Control signals and communications

2 Change Record

Revision	Date	Authors	Changes
0.1	2007-08-10	MF	First draft version

3 Notification List

The following people should be notified by email that a new version of this document has been issued:

MROI: **Fernando Santoro**

UoC: **Chris Haniff**
David Buscher
Martin Fisher

Table of Contents

1 ICD Description 2
2 Change Record 2
3 Notification List 2
4 Scope 3
5 Acronyms and Abbreviations 3
6 Applicable Documents 4
7 Reference Documents 4
8 Introduction 4
8.1 Opto-Mechanical interfaces 4
8.2 Electrical interfaces 5
9 Requirements 5
9.1 Opto-Mechanical 5
9.2 Electrical 5
10 Design 6
10.1 Opto-Mechanical 6
10.2 Electrical 6
11 Appendix 6

4 Scope

This ICD details the positioning of the metrology beams with respect to each delay line pipe and electrical connections specifically between the metrology system and the delay lines. It does not define the height or positioning of the metrology table(s) nor electrical connections between the delay lines and other BCF subsystems.

5 Acronyms and Abbreviations

BCA Beam Combining Area
BCF Beam Combining Facility
BRS Beam Relay System
DL Delay Line
DLA Delay Line Area
ICD Interface Control Document
ICS Interferometer Control System
SCS Supervisory Control System
MROI Magdelena Ridge Observatory
Interferometer
UoC University of Cambridge
NMT New Mexico Tech
OPD Optical Path Delay
TBC To be confirmed
TBD To be determined
`

6 Applicable Documents

DOCUMENTS

AD1 Derived Requirements

DRAWINGS

Specific interface drawings(s): – For this initial version of the ICD a diagram is included in this document.

7 Reference Documents

RD1 Delay line to Beam Relay system (INT-406-VEN-0008)

RD2 Delay line to BCF infrastructure (building) (INT-406-VEN-0009)

RD3 Metrology System to BCF (INT-406-VEN-0012)

RD4 Metrology System to Beam Relay System (INT-406-VEN-0013)

RD5 Risk Reduction Experiments

RD6 Trolley Design

RD7 Delay line pipe end-plate design drawing

RD8 Design of Delay line pipes and supports

8 Introduction

This ICD describes the interface between the delay line pipes and the metrology system. There are two aspects:

1. Mechanical: the positioning of the expanded metrology beams with respect to the delay lines.
2. Electrical: the direct electrical connections between the metrology system and the delay lines.

8.1 Opto-Mechanical interfaces

The nominal positions and orientations of the incoming science beams are the reference positions for the centres of the upper science beam entrance apertures of the delay line pipes. The centres of the entrance apertures become the reference positions for the expanded beams of the metrology system.

The horizontal separation of the delay line pipes (2 feet) is a compromise between accessibility of the pipe support structure, the pipe joints etc. and minimising the size and hence cost of the DLA.

For each delay line, the design constraints of the trolley cat's eye and the windows of the delay line end-plate determine the position and separation of the outgoing and returning metrology beams. The diameter of the metrology beams is a derived requirement (AD1), determined by error budget considerations and detailed in the risk reduction experiments (RD5).

Considerations of accessibility to the delay line end-plates and to components of the metrology system for alignment or removal place a minimum requirement on the distance between the end-plate and the metrology system and also on the metrology bench. The latter is dealt with specifically in RD3.

8.2 Electrical interfaces

The electrical interfaces between the delay lines and the metrology system are defined at the connection to the VME system which is housed in the outer BCA area. The signals that pass between the VME system and the delay lines are:

- The datum signal and its associated power supply for each delay line.
- The low latency analogue signal for each delay line.

The datum signal and power connect to the sensor on each delay line whereas the low latency signals connect to individual transmitter modules which in turn are connected to the antennae input at the far end of each delay line. The transmitter modules are housed in a rack at the far end of the delay line [TBC].

9 Requirements

9.1 Opto-Mechanical

The requirements of the interface are shown in Figure 1 and are also described here:

The horizontal separation of the geometric centre of each pair of expanded metrology beams (outgoing and return) is 2 feet (corresponding with the separation of the delay line pipes).

The horizontal separation of the outgoing and returning expanded metrology beams for each delay line is 165mm.

The vertical separation between the horizontal line joining the centres of the expanded metrology beams and the incoming science beam is 82.5mm.

The diameter of the outgoing expanded metrology beam should be no greater than [22mm TBC] and no less than [18mm TBC].

The aperture of the beam compressor for the return beam should be at least the size of the window on the delay line pipe end-plate.

The distance between the end-plate of the delay line and the nearest metrology component to it should not be less than 0.9m. (This allows sufficient space for the metrology table to project into this space by 150mm and for the protection mechanism for the science window to project a further 250mm in front of the end-plate, thus allowing at least 500mm clear for personnel access. The surface of the end plate is approximately 100mm from the inside wall of the BCA).

9.2 Electrical

The requirements of the interface between the delay lines and the VME system are:

The datum signal and its associated power supply for each delay line occupy one cable and connect to the VME system using an individual connector for each delay line [TBC].

The low latency analogue signal for each delay line is carried on a shielded pair of wires and connects to the VME system using a single connector [TBC].

10 Design

10.1 Opto-Mechanical

The dimensions of the positions of the metrology beams are shown in the Figure 1 provided in the appendix. Tolerances are not specified because the metrology beams can to be adjusted such that satisfactory performance is obtained. Small deviations between the beam centres and the apertures of the associated windows of the delay line pipe end-plate will be due to the accuracy of the setting of the metrology table height rather than manufacturing tolerances.

10.2 Electrical

For each delay line the OPD error signal is converted to an analogue signal in the VME system. This analogue signal is buffered by a differential driver and is carried by an individual screened twisted pair cable to the RF module mounted on the far end of the delay line pipe. The cable for each delay line is fitted with a connector which connects directly to the VME output module.

Details of connector and pin allocations are given in the tables provided in the appendix [TBD].

11 Appendix

Figure 1: A diagram showing two adjacent delay line metrology assemblies with appropriate dimensioning.

Figure 2: A diagram showing distance between end-plate of delay line pipe and nearest metrology component.

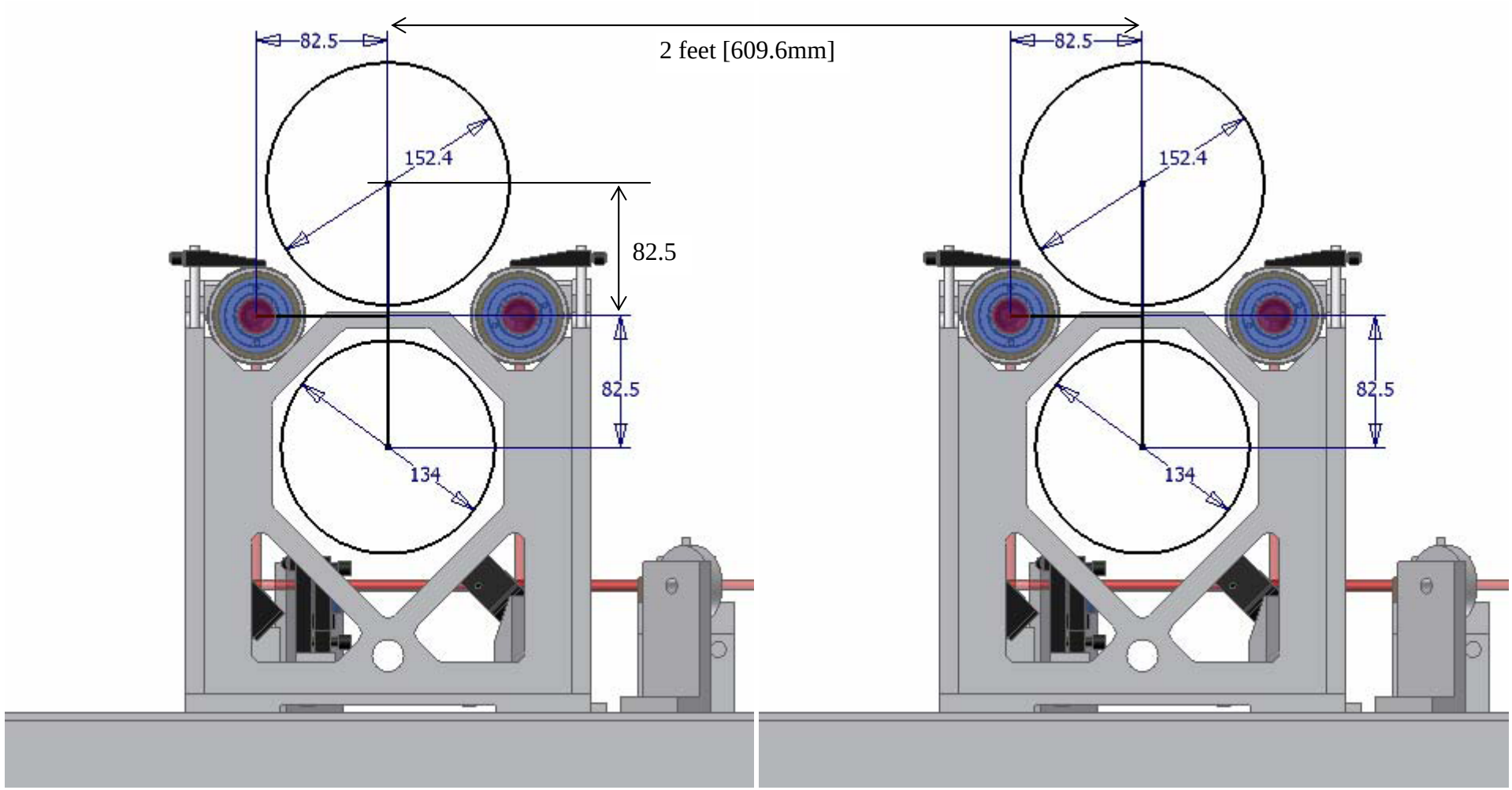

Figure 1 A diagram showing two adjacent delay line metrology assemblies with appropriate dimensioning.

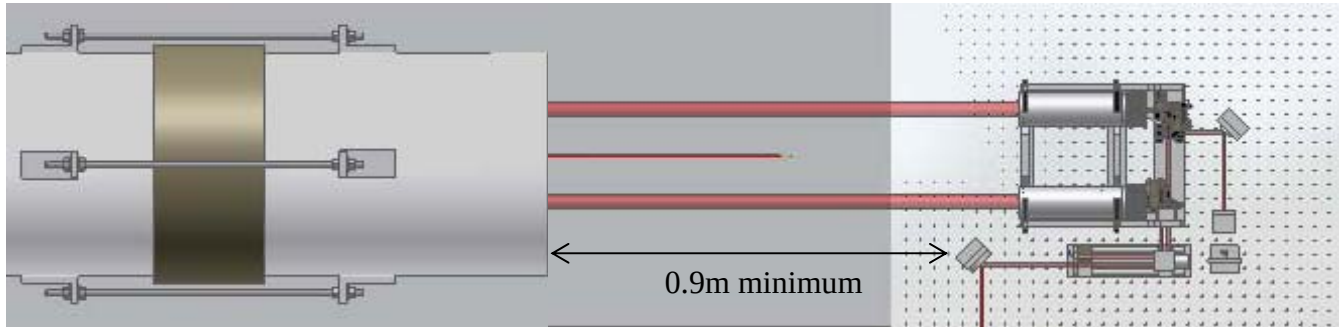

Figure 2 A diagram showing the distance between the end-plate of delay line pipe and the nearest metrology component.