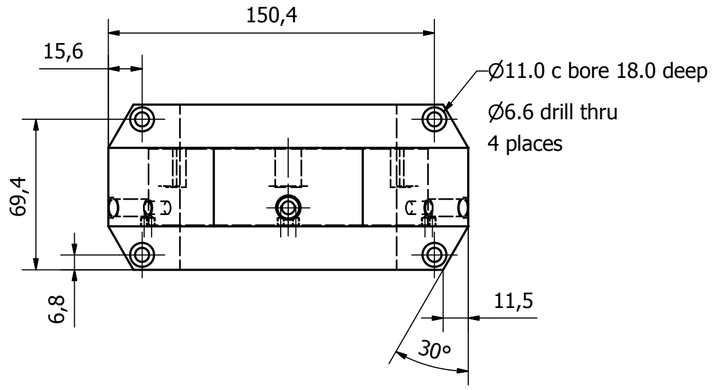

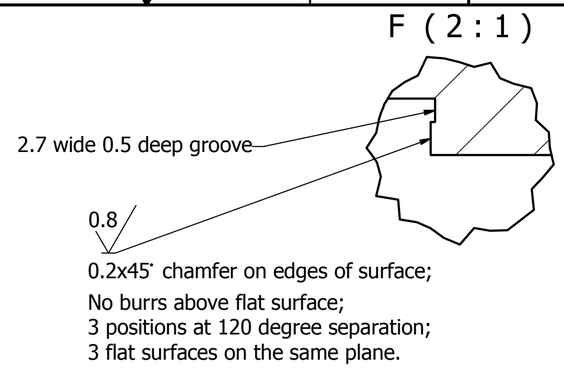

1.6 unless stated

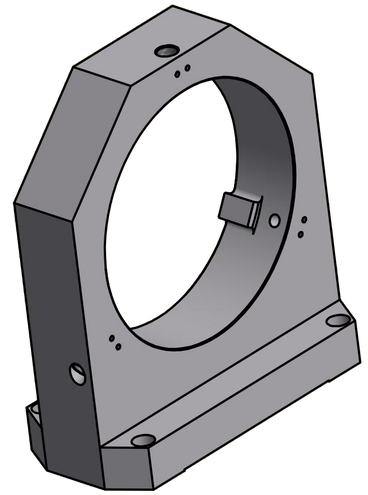

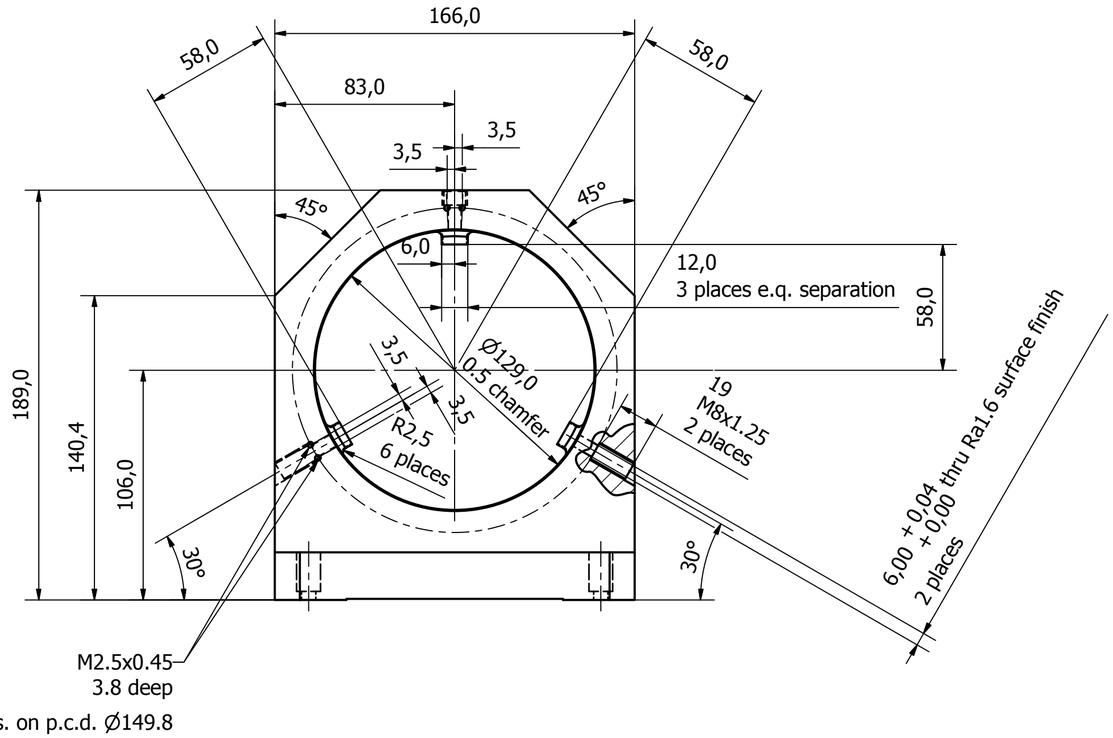

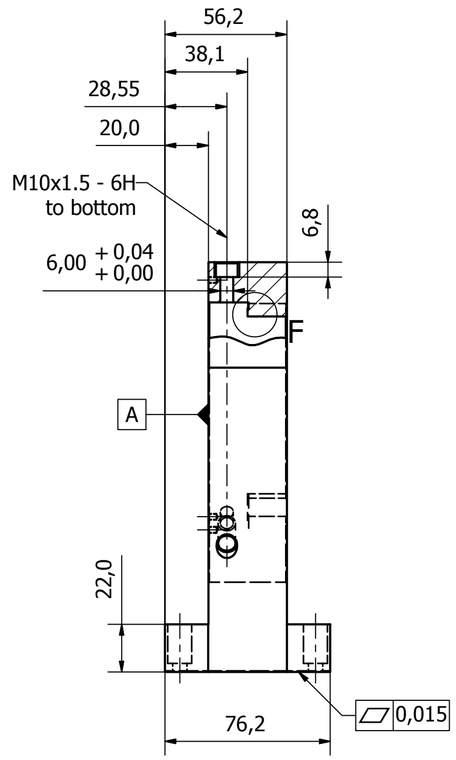

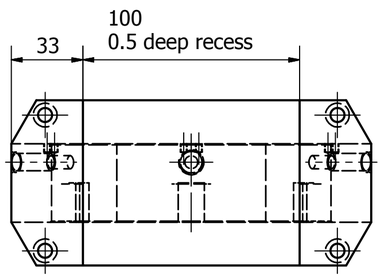

Notes:
(1) Sharp cutter with low feed rate and depth of cut for rough and fine machinings to minimise residual stress on the machined surfaces generated by plastic deforamtion.
(2) Rough in the large pocket at the preliminary machining stage, leaving an allowance on the inner diameters to remove at the final operation.
(3) Remove material symmetrically with respect to the centerplanes with multi passes when roughing closer to the final dimensions to achieve balanced residual stresses before the final fine machining.
(4) Cutting liquid must be used to remove heat and reduce friction.
(5) Careful clamping to avoid excessive clamping force.

SI	Material: MIC-6 Aluminum Cast Plate	Tolerances unless stated: ± 0.06 Angles: ± 0.15˚	Drawn by: DS	Date: 10/02/12	Quantity: 1	Drg. No. FTT-085
	University of Cambridge, Department of Physics CAVENDISH LABORATORY		Title: FLC Fold Mirror Mount			
			Project: MROI		Scale: 1:2	Size: A2