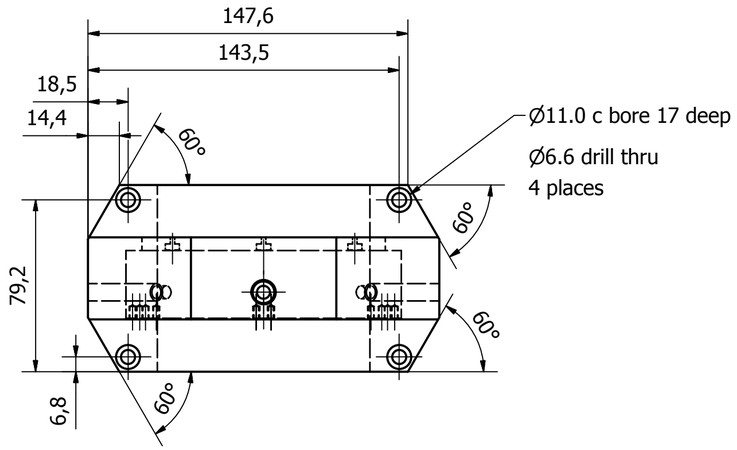

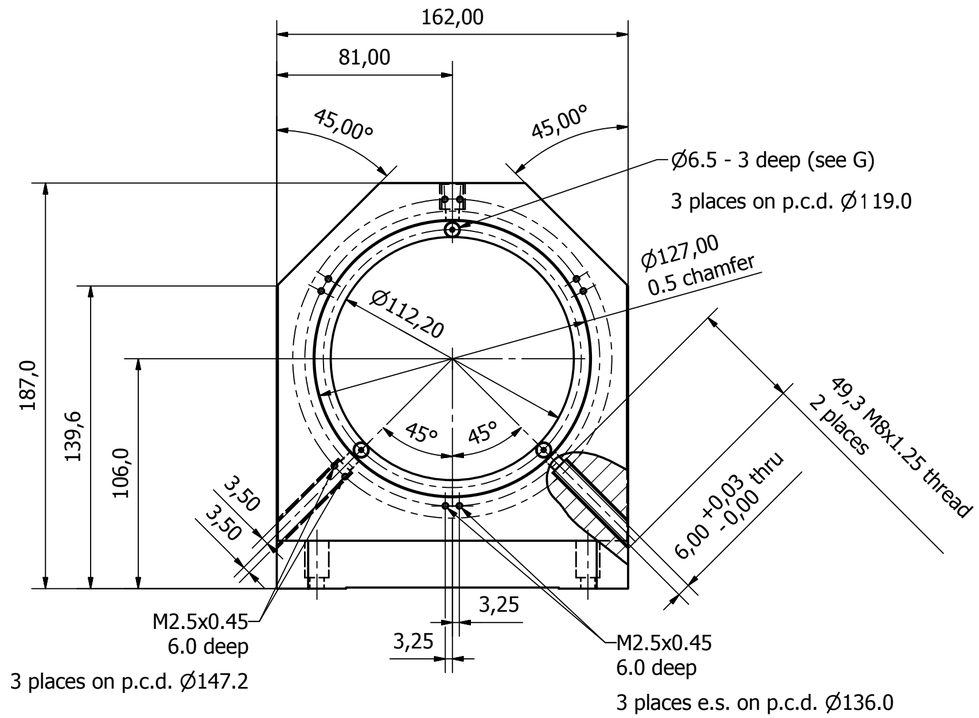

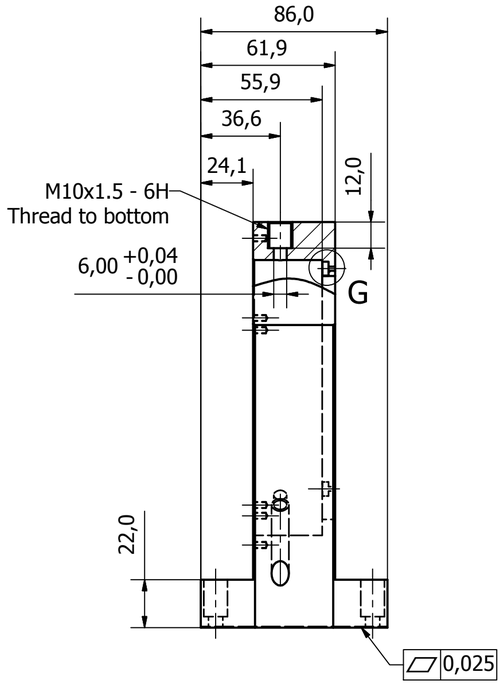

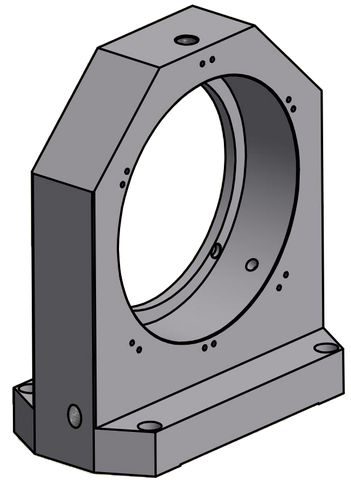

G (3 : 1)

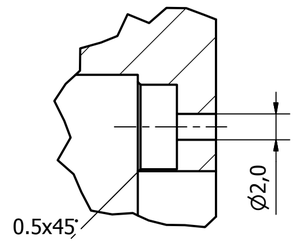

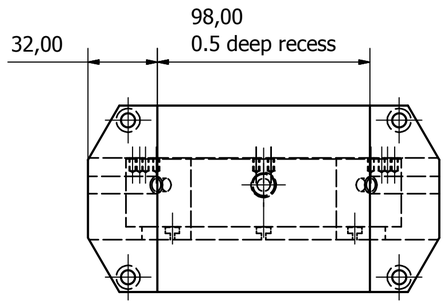

1.6 unless stated

Notes:
(1) Sharp cutters with low feed rate and depth of cut should be used for reducing residual stress on the machined surfaces.
(2) Cutting liquid must be used.
(3) Careful clamping to avoid excessive clamping force.
(4) Rough in the large pocket at the preliminary machining stage, leaving an allowance on the inner diameters to remove at the final operation.
(5) Remove material symmetrically with respect to the centerplanes with multi passes when roughing closer to the final dimensions to achieve balanced residual stresses before the final fine machining.

SI	Material: MIC-6 Aluminum Cast Plate	Tolerances unless stated: ± 0.05 Angles: ± 0.15°	Drawn by: DS	Date: 17/09/13	Quantity: 1	Drg. No. FTT-025
	University of Cambridge, Department of Physics CAVENDISH LABORATORY		Title: FTT Lens Mount			
			Project: MROI		Scale: 1:2	Size: A2